SIMONA

INFRASTRUCTURE

SIMODRAIN® DRAINAGE SYSTEMS

for reliable drainage

HPQ
Herstellerbezogene Produktqualifikation
DBS 918 064
(Technische Mitteilungen)



CONTENTS

2 SIMODRAIN® – FOR PERMANENTLY SAFE TRAFFIC ROUTES
4 Use and performance of drainage pipes
6 Static and dynamic load capacity
8 Benefits at a glance
10 SIMODRAIN® overview of types

11 RANGE OF SIMODRAIN® PIPES
12 SIMODRAIN® PE pipes with HPQ
13 Nominal diameter categories in relation to pipe outside diameter
14 PE pipes with HPQ and integral socket connections
16 PE pipes with HPQ and smooth ends

18 RANGE OF SIMODRAIN® SHAFTS AND SHAFT COVERS
19 PE maintenance and inspection shafts
20 Shaft covers

21 RANGE OF SIMODRAIN® FITTINGS
22 PE double sockets with O-ring
23 PE shaft liners for concreting
24 PE end caps with O-ring
25 PE outlet pieces with frog flaps
26 PE bends, seamless or segment-welded
27 PE branches 45°

28 SERVICES
29 SIMONA accessories
30 Advice and information
32 Questionnaire on the structural sizing of pipes
33 Questionnaire on the structural sizing of shafts
34 Questionnaires on shaft configuration



SIMODRAIN® – for permanently safe traffic routes

Traffic routes are a key element of our technical infrastructure. With this in mind, it is important to keep them in a good, safe condition. Drainage systems channel away groundwater and surface water, helping to preserve and enhance the long-term quality and safety of transportation and traffic networks.

Static and dynamic load capacity as well as fracture resistance are essential prerequisites in this field of application and all products have to meet exacting standards in this respect.

With SIMODRAIN®, SIMONA offers you a comprehensive, certified product range specially conceived for the drainage of both track and road beds.



Railway engineering and road construction are two typical areas of use for SIMODRAIN® drainage pipes.

WELCOME TO SIMONA

SIMONA is one of the leading manufacturers and development partners for thermoplastic pipes, fittings, and semi-finished products. SIMONA supplies innovative end-to-end piping systems in high-quality plastics for all areas of wastewater disposal.

EXPERT ADVICE FROM THE VERY BEGINNING

From project development to planning in the field – SIMONA's experts will be at your disposal to provide all the advice you need. We address every new technical challenge with a keen sense of commitment and enthusiasm. If the focus is on safety-relevant or environmental applications, SIMONA should be your first port of call.

SIMODRAIN® – A SYSTEM-BASED RANGE OF PRODUCTS

With various types of pipes, fittings, joining pieces, shafts, shaft covers and matching accessories, SIMODRAIN® offers a comprehensive system for the installation of new traffic route drainage and for rehabilitation projects.

SIMODRAIN® – APPROVED FOR ALL APPLICATIONS

With "manufacturer-related product qualification" (HPQ) in accordance with DBS 918 064, the SIMODRAIN® system meets the requirements for use in all areas of railway engineering. Other applications include road construction, landfill drainage, tunnel construction, general supporting soil drainage, and the rehabilitation of existing drainage system

USE AND PERFORMANCE OF SIMODRAIN® DRAINAGE PIPES

To make sure a traffic route remains operational in the long term, it is essential to have a drainage system that is continuously effective. SIMODRAIN® piping systems ensure controlled discharge of leachate/seepage water, surface water, and water flowing along soil layers and provide maximum reliability to ensure the long-term stability of rails and roads.

Exposure of railway lines to water and pressure (DBS 918 064)

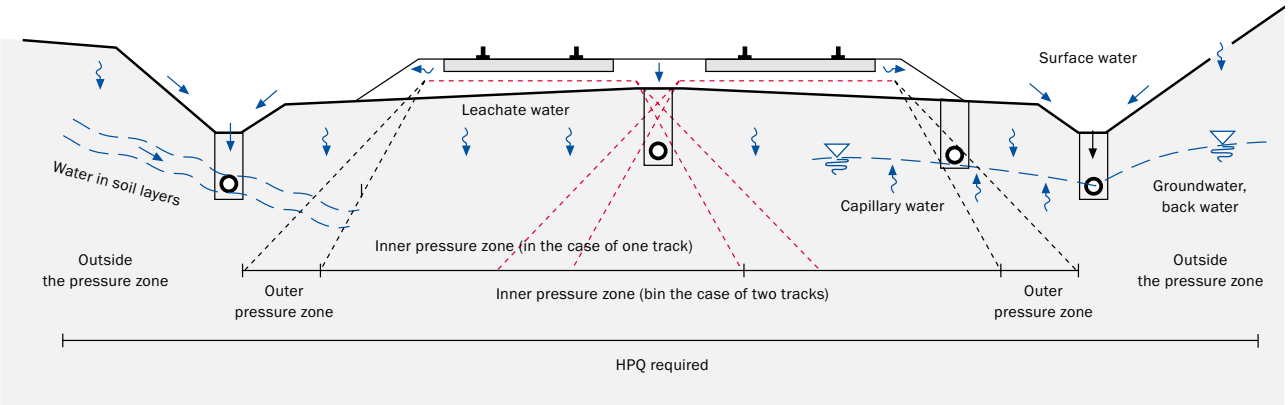

Railway drainage systems must meet specific hydraulic and mechanical requirements.

LOAD CAPACITY AND FRACTURE RESISTANCE ARE BASIC REQUIREMENTS

To be able to use traffic routes safely and without any operating restrictions in the long term, drainage systems have to be not only capable of bearing static and dynamic loads but also resistant to fracture. Static and dynamic live loads and soil loads are the highest mechanical forces acting on traffic routes. The system is also exposed to hydraulic loads due to the influx of water above and below ground.

When it comes to the long-term drainage of traffic route structures, water under pressure and in situ water at the structure has to be discharged directly. Only then can water infiltration and the associated damage and instability in road or rail networks be prevented.

TASKS OF DRAINAGE SYSTEMS

- Fast interception, collection, and discharge of inflowing water
- Absorption and discharge of unbound gravitational water
- Prevention of surface water penetration into the earth structure and supporting medium
- Cutting off the supply of water from the underlying ground to prevent damage due to frost

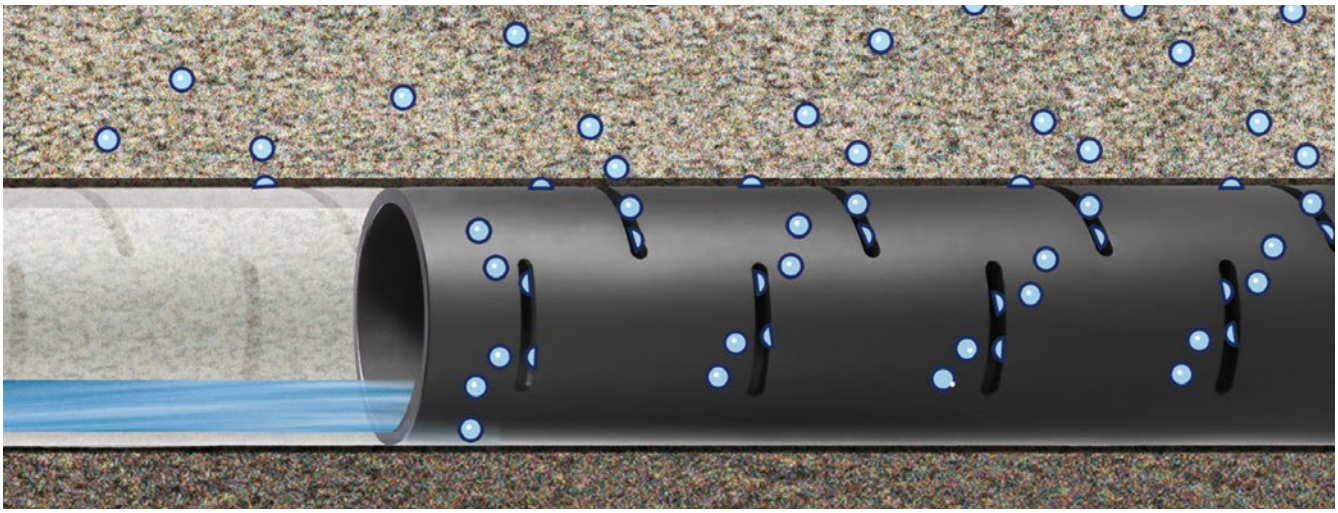

Principle of the absorption and discharge of leachate water in an earth structure

SIMODRAIN® PIPES IN HEAVY-LOAD TRAFFIC

SIMODRAIN® pipes have a solid PE wall. Their high capacity to withstand static and dynamic loads, combined with excellent material properties, makes them particularly suitable for the heavy-load traffic applications in which they are most commonly used:

- On high-speed lines in categories P230 and M230
- On main haul-away lines with a very high proportion of goods and/or heavy-load traffic

Possible fields of application:

- Road construction
- Railway engineering
- Landfill drainage
- Tunnel construction
- General supporting soil drainage
- Rehabilitation

BENEFITS OF PE PIPING SYSTEMS IN TRAFFIC ROUTE ENGINEERING

- Fracture-resistant pipe due to high flexibility
- Can be rinsed out at high pressure in accordance with DIN 19523, Procedure 1
- Ring stiffness in accordance with DIN EN ISO 9969 and DIN EN 12666
- Suitable for very high static and dynamic loads
- Resistant to all substances normally contained in the ground
- Favorable hydraulic conditions due to smooth interior pipe surfaces ($k \leq 0.01$ mm)
- Trouble-free open-air storage due to UV and frost resistance
- Fast laying due to socket connection and long component lengths
- Slot pattern based on DIN 4266 and 4262; DBS 918 064
- Easy handling due to light weight

SIMODRAIN® – CAPABLE OF BEARING STATIC AND DYNAMIC LOADS

Rail traffic routes are subjected to extreme static and dynamic loads caused by rail traffic. Sizing buried piping systems for transportation infrastructure requires appropriate long-term data. That data is documented in the modulus of elasticity and in vibration fatigue resistance.

MODULUS OF ELASTICITY

The time- and temperature-dependent modulus of elasticity describes the relationship between stress and strain as a solid deforms. It is used to calculate the pipe's static load capacity.

Strength values for sizing thermoplastic pipes

Creep modulus for PE 100

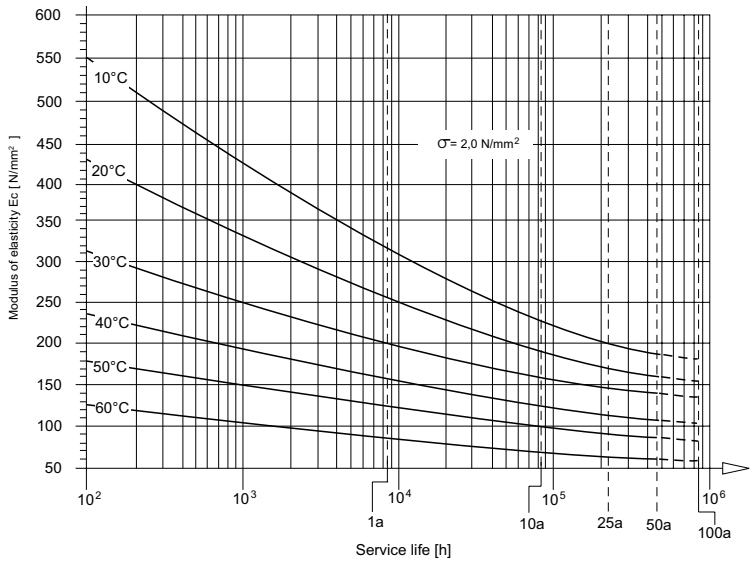

Conversion factors for stress range	
σ= 0,5 N/mm²	1,20
σ= 1,0 N/mm²	1,08
σ= 2,0 N/mm²	1,00
σ= 3,0 N/mm²	0,78
σ= 4,0 N/mm²	0,70
σ= 5,0 N/mm²	0,60

Modulus of elasticity [N/mm²]		
Column	1	2
Temperature	E_{kZ} 10⁻¹ h	E_c 100 min
≤ 10 °C	1100	850
20 °C	800	630
30 °C	550	450
40 °C	390	325
50 °C	270	230
60 °C	190	160

Note:
The figures in column 1 are from DVS 2205-2, Table 6. The figures in column 2 are figures extrapolated between E_{kZ} (10^{-1} h) and E_{LZ} (1 year) in accordance with DVS 2205-1.

Modulus of elasticity values (creep moduli) for the sizing of SIMODRAIN® pipes

VIBRATION FATIGUE RESISTANCE

To determine fatigue strength under cyclic loading, PE 100 specimens conforming to DIN EN ISO 527 were subjected to pulsating tensile loading on a dynamic test rig. The test procedure was based on DIN 50100. Analysis of the test data showed that SIMODRAIN® PE pipes are especially well suited to routes carrying heavy loads because of their excellent fatigue strength under cyclic loading.

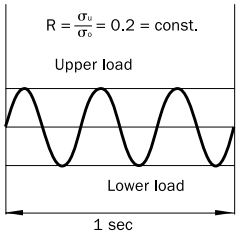

Vibration test in accordance with DIN 50100 applying a sinusoidal load at a frequency of 3 Hz and a constant minimum-to-maximum load ratio of 0.2.

Pipe deformation (SIMODRAIN® PE 100, d=200mm) due to soil load and live load LM 71, multi-track in the case of installation with trench conditions in soil class G1, DPr = 95%

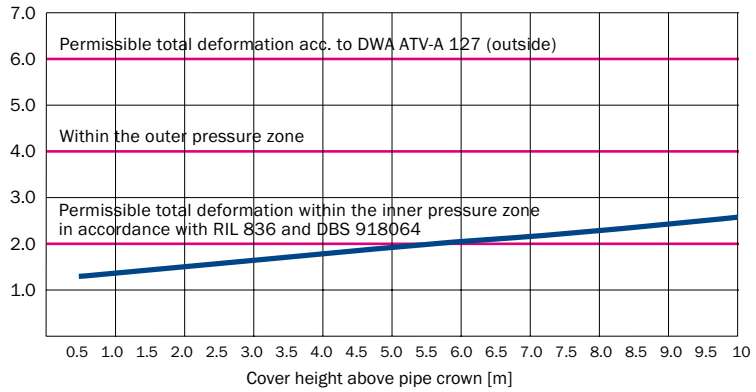

The diagram shows the deformation of PE 100 SIMODRAIN® d=200 mm pipes at installation depths of 0.5 m to 10.0 m subject to the laying conditions of RIL 836 and DBS 918064 and assuming railway traffic loads. For a detailed structural analysis of SIMODRAIN® pipes, please use the questionnaire on page 32.

SIMODRAIN® pipes withstand high static and dynamic soil stresses in the long term



SIMODRAIN® – YOUR BENEFITS AT A GLANCE

Fracture-resistant pipe due to high level of flexibility

SIMODRAIN® pipes and fittings are also suitable for applications subject to high static and dynamic loads.

Trouble-free pipelaying

As a general rule, plastic drainage pipes may be used only if their properties comply with the applicable technical codes of practice and are regularly verified by recognized testing bodies. Applicable standards and guidelines provide the basis for correct laying of SIMODRAIN® drainage pipes in the railway sector.



Excellent hydraulics due to smooth pipe interior surfaces

Owing to their very smooth interior wall surfaces, SIMODRAIN® pipes achieve excellent discharge capacities ($k \leq 0.01$ mm) – perfect protection against incrustation.

Tested ability to withstand high-pressure jetting

SIMODRAIN® pipes, fittings, and shafts can be jetted at high pressure. They were tested for their resistance to high-pressure jetting in accordance with DIN 19523, Method 1, in conjunction with the demanding requirements imposed by German rail network operator DB Netz AG.

Approved for railway construction

HPQ „Herstellerbezogene Produktqualifikation“ (“manufacturer-related product qualification”) in accordance with DBS 918 064. Certification covers pipes up to and including 630 mm OD.

Notch-free slot geometry

The slot geometry of SIMODRAIN® pipes enables optimal rinsability. As opposed to the side-milling cutter method, there are no undercuts, pockets, or notch-stress-sensitive radii in which iron ochre deposits and incrustations can develop and accumulate. The slot pattern for water influx is based on DIN 4266 and 4262 in accordance with DBS 918 064.

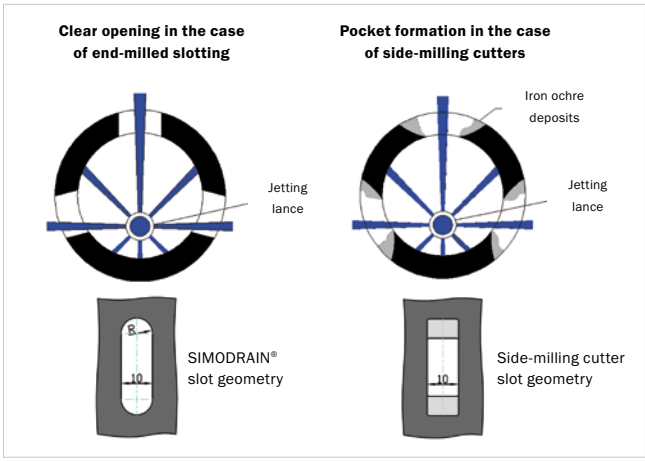

You will find detailed laying information, discharge tables, and sample calculations for the hydraulic data in the tech.info SIMODRAIN® Drainage Pipe Systems

SIMODRAIN® OVERVIEW OF TYPES

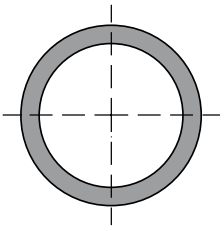

SIMODRAIN® Multi-Purpose Pipes, Unslotted (UP)*

Unslotted pipes are used for the discharge of large flows of water without the water absorption function. They are used as collecting drains, conveying water to the receiving watercourse via shafts.

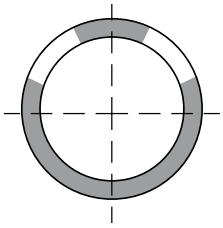

SIMODRAIN® Multi-Purpose Pipes, 1/3 Slotted (MP)*

They function as partial leachate pipes (draining the soil) and also serve as collecting drains over longer distances through the closed lower part of their cross section.

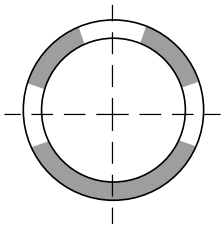

SIMODRAIN® Partial Leachate Pipes, 2/3 Slotted (LP)*

The pipes are laid in a bed that slopes toward the drain; they absorb leachate/seepage water, water in soil layers, and surface water through the slots at the top, conveying it to the next receiving watercourse in the enclosed bottom area.

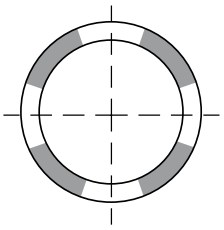

SIMODRAIN® Full Leachate Pipes, 3/3 Slotted (TP)*

Full leachate pipes are most effective for sections with a supporting medium capable of seepage. Owing to their slots distributed around the circumference of the pipe and a bedding course made of filter material, not only leachate/seepage water and water in soil layers but also water pressing from below (unbound gravitational water) can be absorbed and taken to the nearest collecting drain.

* Designation based on DIN 4262-1

PRODUCT RANGE – SIMODRAIN® PIPES

SIMODRAIN® drainage systems meet the stringent safety requirements set by Germany's Federal Railway Authority (EBA) for pipe systems subject to high static and dynamic loads.



SIMODRAIN® PE PIPES WITH HPQ

Material
PE 100

Color
Black

Dimensions
- DIN 8074
- Module length L_M = 6.0 m
- Component length L_B = see product range table onpages 14/15

Connection technology
- Integral socket connection (WIMU)
- Seal: O-ring (drip-tight), axial locking
- Smooth inner and outer surfaces with no protruding socket
- Laying does not require any socket recesses in the pipe support

In those cases in which laying conditions are different, it is possible to supply verifiable structural analyses based on ATV-DVWK-A127. The calculations are subject to a charge.

Approvals

HPQ Herstellerbezogene Produktqualifikation DBS 918 064 (Technische Mitteilungen)

TÜV SÜDDEUTSCHLAND TÜV-Standard MUC-KSP-A 006



Multi-purpose pipe (UP), unslotted



Multi-purpose pipe (MP), 1/3 slotted



Partial leachate pipe (LP), 2/3 slotted



Full leachate pipe (TP), 3/3 slotted

You will find a detailed specification text for tenders for SIMODRAIN® pipes at: **www.simona.de/simodrain**

NOMINAL SIZES AND CORRESPONDING OUTSIDE DIAMETERS FOR HPQ SIMODRAIN® PE PIPES

For the intended application, the pipe inside diameters listed in the table must be checked against the nominal sizes DN/OD required by the hydraulic design. As regards the hydraulic sizing of drainage pipes, it is important to note: the discharge capacity of SIMODRAIN® pipes can be determined with the aid of our “tech.info SIMODRAIN® Drainage Pipe Systems.”

Nominal size assignment

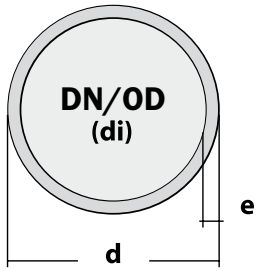

DN/OD is the outside diameter-related nominal size as defined by DIN EN 12666-1

DN nominal diameter categories for pipe outside diameter d

		SDR 21			SDR 17			SDR 11		
DN/OD mm	d mm	e mm	di mm	kg/m	e mm	di mm	kg/m	e mm	di mm	kg/m
110	110	5.3	99.4	1.79						
125	125	6.0	113.0	2.29						
	140	6.7	126.0	2.86						
160	160	7.7	144.6	3.75	9.5	141.0	4.57	14.6	130.8	6.74
	180	8.6	162.8	4.71	10.7	158.6	5.77	16.4	147.2	8.51
200	200	9.5	181.0	5.84	11.9	176.2	7.12	18.2	163.6	10.5
	225	10.8	203.4	7.37	13.4	198.2	9.03	20.5	184.0	13.3
250	250	11.9	226.2	9.02	14.8	220.4	11.1	22.7	204.6	16.3
	280	13.7	252.6	11.4	16.6	246.8	13.9	25.4	229.2	20.5
315	315	15.0	285.0	14.3	18.7	277.6	17.6	28.6	257.8	25.9
355	355	16.9	321.2	18.2	21.1	312.8	22.4	32.2	290.6	32.9
400	400	19.1	361.8	23.1	23.7	352.6	28.3	36.3	327.4	41.7
450	450	21.5	407.0	29.3	26.7	396.6	35.8	40.9	368.2	52.8
500	500	23.9	452.2	36.1	29.7	440.6	44.2	45.4	409.2	65.2
	560	26.7	506.6	45.1	33.2	493.6	55.4	50.8	458.4	81.7
630	630	30.0	570.0	57.0	37.4	555.2	70.2	57.2	515.6	103.0
	710	33.9	642.2	72.6	42.1	625.8	89.0			
800	800	38.1	723.8	92.0	47.4	705.2	113.0			

Dimensions/tolerances acc. to DIN 8074

SIMODRAIN® PE 100 PIPES WITH HPQ, SDR 21/SN 8, AND INTEGRAL SOCKET CONNECTIONS (WIMU)

SIMODRAIN® PE pipes in ring stiffness class SN 8 are used in the outer pressure zone or outside the pressure zone associated with railway traffic loads.

Approvals/external monitoring

HPQ Herstellerbezogene Produktqualifikation DBS 918 064 (Technische Mitteilungen)

TÜV SÜDDEUTSCHLAND TÜV-Standard MUC-KSP-A 006

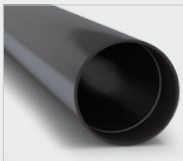

Multi-purpose pipe (UP), unslotted



Multi-purpose pipe (MP), 1/3 slotted



Partial leachate pipe (LP), 2/3 slotted



Full leachate pipe (TP), 3/3 slotted

SIMODRAIN® PE 100 pipes with HPQ, SDR 21, ring stiffness SN 8

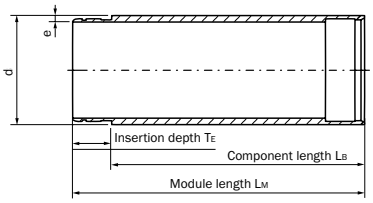

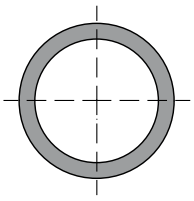

Multi-purpose pipe (UP) unslotted

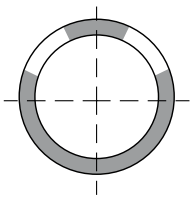

Multi-purpose pipe (MP) 1/3 slotted

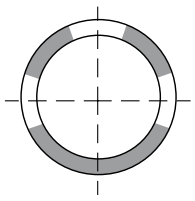

Partial leachate pipe (LP) 2/3 slotted

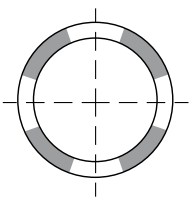

Full leachate pipe (TP), 3/3 slotted

d mm	e mm	di mm	L_M mm	L_B mm	Art.-No.	Art.-No.	Art.-No.	Art.-No.
160	7.7	144.6	6000	5940	010021922	010021928	010021924	010021926
180	8.6	162.8	6000	5940	010021923	010021929	010021925	010021927
200	9.6	181.0	6000	5940	010019471	010019503	010019482	010019492
225	10.8	203.4	6000	5920	010019472	010019504	010019483	010019493
250	11.9	226.2	6000	5920	010019473	010019505	010019484	010019494
280	13.4	252.6	6000	5910	010019474	010019506	010019485	010019495
315	15.0	285.0	6000	5900	010019475	010019507	010019363	010019496
355	16.9	321.2	6000	5890	010019476	010019508	010019486	010019497
400	19.1	361.8	6000	5880	010019477	010019509	010019487	010019498
450	21.5	407.0	6000	5865	010019478	010019510	010019488	010019499
500	23.9	452.2	6000	5865	010019479	010019511	010019489	010019500
560	26.7	506.6	6000	5865	010019480	010019512	010019490	010019501
630	30.0	570.0	6000	5865	010019481	010019513	010019491	010019502
710	33.9	642.2	6000	5780	On request			
800	38.1	723.8	6000	5755	On request			

You will find a detailed specification text for tenders for SIMODRAIN® pipes at: **www.simona.de/simodrain**

SIMODRAIN® PE 100 PIPES WITH HPQ, SDR 17/SN 16, SDR 11/SN 64, AND INTEGRAL SOCKET CONNECTIONS (WIMU)

SIMODRAIN® PE pipes in ring stiffness classes SN 16 and SN 64 are used within the pressure zone associated with railway traffic loads.

Approvals

HPQ Herstellerbezogene Produktqualifikation
DBS 918 064 (Technische Mitteilungen)

TÜV SÜDDEUTSCHLAND – TÜV-Standard MUC-KSP-A 006

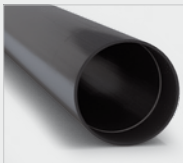

Multi-purpose pipe (UP), unslotted



Multi-purpose pipe (MP), 1/3 slotted



Partial leachate pipe (LP), 2/3 slotted



Full leachate pipe (TP), 3/3 slotted

SIMODRAIN® PE 100 pipes with HPQ, SDR 17, ring stiffness SN 16

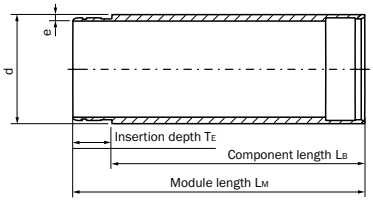

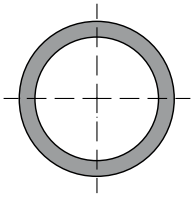

Multi-purpose pipe (UP) unslotted

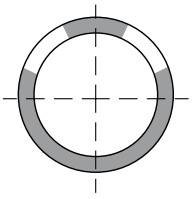

Multi-purpose pipe (MP) 1/3 slotted

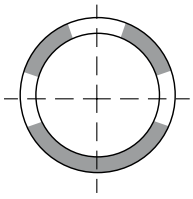

Partial leachate pipe (LP) 2/3 slotted

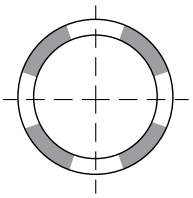

Full leachate pipe (TP), 3/3 slotted

d mm	e mm	di mm	L_M mm	L_B mm	Art.-No.	Art.-No.	Art.-No.	Art.-No.
160	9.5	141.0	6000	5940	010021973	010022025	010021999	010022051
180	10.7	158.6	6000	5940	010021974	010022026	010022000	010022052
200	11.9	176.2	6000	5940	010021975	010022027	010022001	010022053
225	13.4	198.2	6000	5920	010021976	010022028	010022002	010022054
250	14.8	220.4	6000	5920	010021977	010022029	010022003	010022055
280	16.6	246.8	6000	5910	010021978	010022030	010022004	010022056
315	18.7	277.6	6000	5900	010021979	010022031	010022005	010022057
355	21.1	312.8	6000	5890	010021980	010022032	010022006	010022058
400	23.7	352.6	6000	5880	010021981	010022033	010022007	010022059
450	26.7	396.6	6000	5865	010021982	010022034	010022008	010022060
500	29.7	440.6	6000	5865	010021983	010022035	010022009	010022061
560	33.2	493.6	6000	5865	010021984	010022036	010022010	010022062
630	37.4	555.2	6000	5865	010021985	010022037	010022011	010022063

SIMODRAIN® PE 100 Rohre mit HPQ, SDR 11, Ringsteifigkeit SN 64

d mm	e mm	di mm	L_M mm	L_B mm	Art.-No.	Art.-No.	Art.-No.	Art.-No.
160	14.6	130.8	6000	5940	010021960	010022012	010021986	010022038
180	16.4	147.2	6000	5940	010021961	010022013	010021987	010022039
200	18.2	163.6	6000	5940	010021962	010022014	010021988	010022040
225	20.5	184.0	6000	5920	010021963	010022015	010021989	010022041
250	22.7	204.6	6000	5920	010021964	010022016	010021990	010022042
280	25.4	229.2	6000	5910	010021965	010022017	010021991	010022043
315	28.6	257.8	6000	5900	010021966	010022018	010021992	010022044
355	32.2	290.6	6000	5890	010021967	010022019	010021993	010022045
400	36.3	327.4	6000	5880	010021968	010022020	010021994	010022046
450	40.9	368.2	6000	5865	010021969	010022021	010021995	010022047
500	45.4	409.2	6000	5865	010021970	010022022	010021996	010022048
560	50.8	458.4	6000	5865	010021971	010022023	010021997	010022049
630	57.2	515.6	6000	5865	010021972	010022024	010021998	010022050

SIMODRAIN® PE 100 PIPES WITH HPQ, SDR 21/SN 8, AND SMOOTH ENDS

SIMODRAIN® PE pipes in ring stiffness class SN 8 are used in the outer pressure zone or outside the pressure zone associated with railway traffic loads.

Approvals/external monitoring

HPQ Herstellerbezogene Produktqualifikation
DBS 918 064 (Technische Mitteilungen)

TÜV SÜDDEUTSCHLAND – TÜV-Standard MUC-KSP-A 006

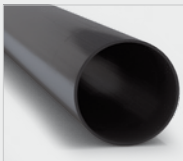

Multi-purpose pipe (UP), unslotted



Multi-purpose pipe (MP), 1/3 slotted



Partial leachate pipe (LP), 2/3 slotted



Full leachate pipe (TP), 3/3 slotted

SIMODRAIN® PE 100 pipes with HPQ, SDR 21, ring stiffness SN 8

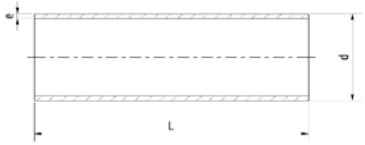

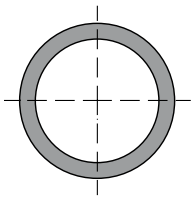

Multi-purpose pipe (UP) unslotted

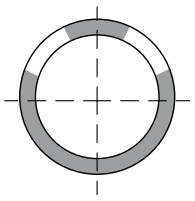

Multi-purpose pipe (MP) 1/3 slotted

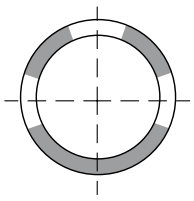

Partial leachate pipe (LP) 2/3 slotted

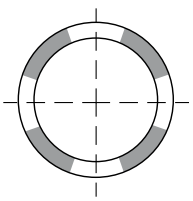

Full leachate pipe (TP), 3/3 slotted

d mm	e mm	di mm	L_M mm	Art.-No.	Art.-No.	Art.-No.	Art.-No.
160	7.7	144.6	6000	10015303	10015351	10015319	10015335
180	8.6	162.8	6000	10015304	10015352	10015320	10015336
200	9.6	180.8	6000	10015305	10015353	10015321	10015337
225	10.8	203.4	6000	10015306	10015354	10015322	10015338
250	11.9	226.2	6000	10015307	10015355	10015323	10015339
280	13.4	253.2	6000	10015308	10015356	10015324	10015340
315	15.0	285.0	6000	10015309	10015357	10015325	10015341
355	16.9	321.2	6000	10015310	10015358	10015326	10015342
400	19.1	361.8	6000	10015311	10015359	10015327	10015343
450	21.5	407.0	6000	10015312	10015360	10015328	10015344
500	23.9	452.2	6000	10015313	10015361	10015329	10015345
560	26.7	506.6	6000	10015314	10015362	10015330	10015346
630	30.0	570.0	6000	10015315	10015363	10015331	10015347

You will find a detailed specification text for tenders for SIMODRAIN® pipes at: **www.simona.de/simodrain**

SIMODRAIN® PE 100 PIPES WITH HPQ, SDR 17/SN 16, SDR 11/SN 64, AND SMOOTH ENDS

SIMODRAIN® PE pipes in ring stiffness classes SN 16 and SN 64 are used within the pressure zone associated with railway traffic loads.

Approvals

HPQ Herstellerbezogene Produktqualifikation
DBS 918 064 (Technische Mitteilungen)

TÜV SÜDDEUTSCHLAND – TÜV-Standard MUC-KSP-A 006

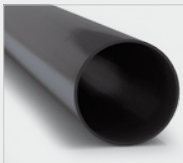

Multi-purpose pipe (UP), unslotted



Multi-purpose pipe (MP), 1/3 slotted



Partial leachate pipe (LP), 2/3 slotted



Full leachate pipe (TP), 3/3 slotted

SIMODRAIN® PE 100 pipes with HPQ, SDR 17, ring stiffness SN 16

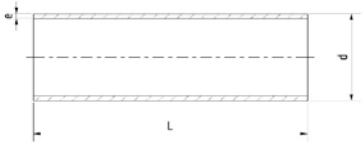

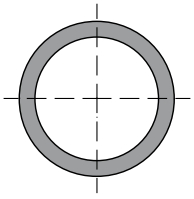

Multi-purpose pipe (UP) unslotted

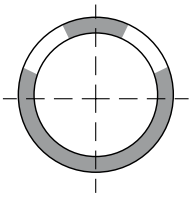

Multi-purpose pipe (MP) 1/3 slotted

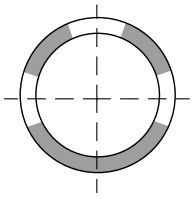

Partial leachate pipe (LP) 2/3 slotted

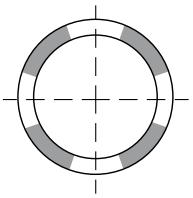

Full leachate pipe (TP), 3/3 slotted

d mm	e mm	di mm	L_M mm	Art.-No.	Art.-No.	Art.-No.	Art.-No.
160	9.5	141.0	6000	10005588	10005733	10005685	10005709
180	10.7	158.6	6000	10005590	10005735	10005687	10005711
200	11.9	176.2	6000	10005592	10005737	10005689	10005713
225	13.4	198.2	6000	10005594	10005739	10005691	10005715
250	14.8	220.4	6000	10005596	10005741	10005693	10005717
280	16.6	246.8	6000	10005598	10005743	10005695	10005719
315	18.7	277.6	6000	10005600	10005745	10005697	10005721
355	21.1	312.8	6000	10005602	10005747	10005699	10005723
400	23.7	352.6	6000	10005604	10005749	10005701	10005725
450	26.7	396.6	6000	10005606	10005751	10005703	10005727
500	29.7	440.6	6000	10018832	10012862	10012782	10012822
560	33.2	493.6	6000	10018833	10012863	10012783	10012823
630	37.4	555.2	6000	10018834	10012864	10012784	10012824

SIMODRAIN® PE 100 pipes with HPQ, SDR 11, ring stiffness SN 64

d mm	e mm	di mm	L_M mm	Art.-No.	Art.-No.	Art.-No.	Art.-No.
160	14.6	130.8	6000	10005589	10005734	10005686	10005710
180	16.4	147.2	6000	10005591	10005736	10005688	10005712
200	18.2	163.6	6000	10005593	10005738	10005690	10005714
225	20.5	184.0	6000	10005595	10005740	10005692	10005716
250	22.7	204.6	6000	10005597	10005742	10005694	10005718
280	25.4	229.2	6000	10005599	10005744	10005696	10005720
315	28.6	257.8	6000	10005601	10005746	10005698	10005722
355	32.2	290.6	6000	10005603	10005748	10005700	10005724
400	36.3	327.4	6000	10005605	10005750	10005702	10005726
450	40.9	368.2	6000	10005607	10005752	10005704	10005728
500	45.4	409.2	6000	10018829	10012858	10012778	10012818
560	50.8	458.4	6000	10018830	10012859	10012779	10012819
630	57.2	515.6	6000	10018831	10012860	10012780	10012820

PRODUCT RANGE – SIMODRAIN® SHAFTS AND SHAFT COVERS

SIMODRAIN® PE maintenance and inspection shafts are available in various configurations for use inside the pressure zone, in the outer pressure zone, and outside the pressure zone. Depending on the load profile, SIMONA offers matching shaft covers.



SIMODRAIN® PE MAINTENANCE AND INSPECTION SHAFTS



Material
PE 100

Color
Black

Dimensions

- Shaft jacket and connection nozzles conforming to DIN 8074
- Shafts are available as channel shafts or sand trap shafts. In the case of sand trap shafts the sand trap has a minimum depth of 150 mm
- Connection using double socket
- Double socket available separately; see page 22
- For special applications, structural calculations for the shafts can be prepared in accordance with ATV-DVWK-A127 using the client's specifications

As a general rule, the requirements set out in the HPQ approval document must be observed. Any configurations differing from these standards must be agreed in advance.

Approvals

HPQ
Herstellerbezogene Produktqualifikation
DBS 918 064
(Technische Mitteilungen)

For use in the outer pressure zone/outside the pressure zone of railway traffic loads:

SIMONA® SN 8 maintenance and inspection shaft with HPQ

DN/OD mm	e mm	di mm	h mm	Nozzle d mm
450	26.7	396.6	As per spec.	160 – 355
670	31.9	606.2	As per spec.	160 – 500
800	47.4	705.2	As per spec.	160 – 500
1,000	59.3	881.4	As per spec.	160 – 630
1,200	71.1	1,057.8	As per spec.	160 – 800

DN/OD 630, 710, and 900 on request

For use in the inner pressure zone of railway traffic loads:

SIMONA® SN 16 maintenance and inspection shaft with HPQ

DN/OD mm	e mm	di mm	h mm	Nozzle d mm
450	26.7	396.6	As per spec.	160 – 355
670	31.9	606.2	As per spec.	160 – 500
800*	47.4	705.2	As per spec.	160 – 500
1,000	59.3	881.4	As per spec.	160 – 630

* Not covered by the HPQ certificate
DN/OD 500, 560, 630, 710, and 900 on request

SIMODRAIN® Sand Trap Shaft

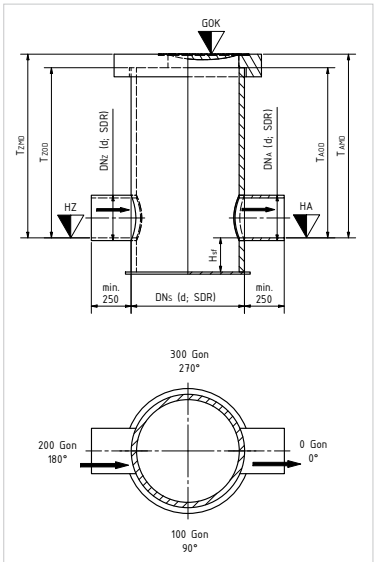

SIMODRAIN® Channel Shaft

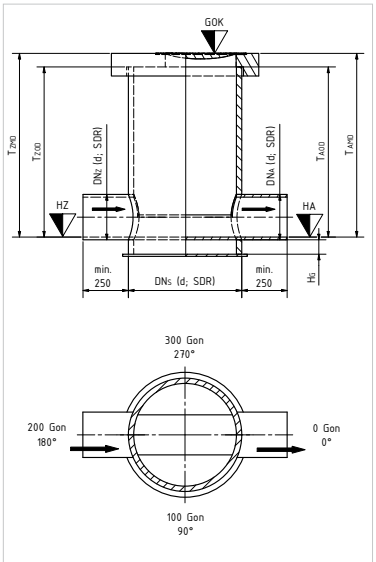

Shaft configuration questionnaires from page 34 onward. You will find a detailed specification text for tenders for SIMODRAIN® shafts at:
www.simona.de/simodrain

SHAFT COVERS FOR SIMODRAIN® SHAFTS

Thanks to their monolithic construction, HPQ SIMODRAIN® PE shafts have proved highly effective in draining railway infrastructure. To an increasing extent, structural conditions call for a space-saving, jobsite-friendly configuration of shaft covers. The SIMODRAIN® PE support ring is a product that meets special requirements for the construction of a deep drainage system in the vicinity of railway traffic loads.

Covers for SIMODRAIN® shafts rest directly on the shaft jacket, transferring loads axially into the shaft body. Given their compact design compared to the conventional method using an external concrete support, installation can therefore also be performed under the confined conditions often encountered in railway construction.



SIMODRAIN® PE support ring for SIMONA® plastic shaft
For accommodating a concrete or cast iron cover plate, class B125, without locking

Shaft DN mm	Shaft OD mm	OD of support ring mm	Art. No.
600	670	739	010026951

Locking version available on request



Concrete/cast iron cover plate for SIMODRAIN® PE support ring
Class B125, non-locking and unvented

Shaft DN mm	Shaft OD mm	Art. No.
600	670	010026999



Concrete cover plate with an integrated cast iron cover
Class B

d mm	da mm	Art. No.
450	800	10029763
500	800	10029767
560	800	10029764
630	1.,000	10029765
800	1,010	10029762
1,000	1,240	10029766
1,200	1,470	10062141

VARIANTS OF SHAFT COVERS FOR SIMODRAIN® SHAFTS

Shaft cover consisting of

- Concrete transition plate (secured against displacement) for vertical transfer of LKW 12 truck loads
- Concrete-cast iron shaft cover load class B (D) according to DIN EN 124, DIN 1229

Concrete-cast iron shaft cover, load class B (D)

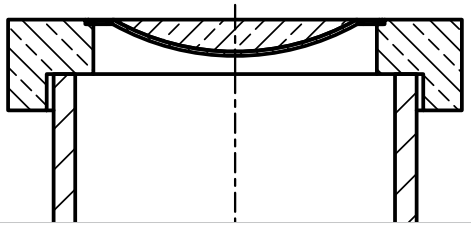

Technical configuration according to project-related agreement. Our team will be happy to advise you: **simodrain@simona-group.com**

PRODUCT RANGE – SIMODRAIN® FITTINGS

SIMONA offers a system matched to customer requirements with specific fittings and system components – everything from a single source for your piping projects.



SIMODRAIN® PE DOUBLE SOCKETS WITH O-RING

Material
PE 100

Color
Black

Note
- Available machined with stop and without stop

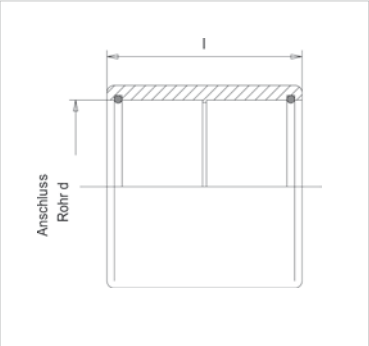



PE Double Sockets with O-ring

d mm	l mm	Art.-No. with stop	Art.-No. without stop
110	200	010005842	010026076
125	200	010005843	010026077
160	250	010005844	010026078
180	250	010005845	010026079
200	250	010005846	010026080
225	250	010005847	010026081
250	250	010005848	010026082
280	300	010005849	010026083
315	300	010005850	010026084
355	300	010005851	010026085
400	300	010005852	010026086
450	400	010005853	010026087
500	400	010020771	010026088
560	400	010024080	010026089
630	400	010024081	010026090

d = pipe outside diameter
l = component length

Matching fittings

We also supply matching fittings for weldable piping systems – e.g., for connections using an electrofusion socket. Contact us! We look forward to assisting you:

simodrain@simona-group.com

SIMODRAIN® PE SHAFT LINERS FOR CONCRETING

Material
PE 100

Color
Black

Notes
- Machined with O-ring
- Non-standard lengths on request

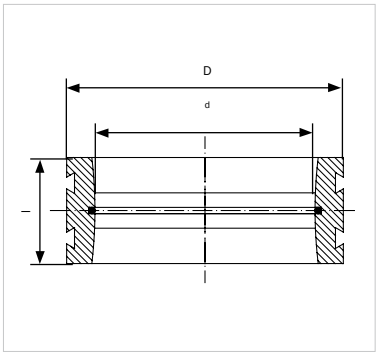



PE shaft liners for concreting

d mm	D mm	l mm	Art.-No.
110	140	135	010005767
125	160	135	010005768
160	200	135	010005769
180	225	135	010005770
200	250	135	010005771
225	280	135	010005772
250	315	135	010005773
280	355	135	010005774
315	400	135	010005775
355	450	135	010005776
400	500	135	010005777
450	560	135	010005778
500	630	135	010024077
560	710	135	010024078
630	800	135	010024079

d = pipe outside diameter
D = outside diameter of the component
l = component length

SIMODRAIN® PE END CAPS WITH O-RING

Material
PE 100

Color
Black

Type
- Machined

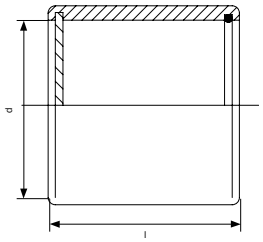



PE end caps with O-ring

d mm	l mm	Art.-No.
110	120	016700004
125	120	016700001
140	120	016700005
160	120	016700002
180	140	016700006
200	140	016700007
225	140	016700008
250	140	016700009
280	170	016700010
315	170	016700011
355	170	016700012
400	170	016700013
450	170	016700014
500	220	auf Anfrage
560	220	auf Anfrage
630	220	auf Anfrage

d = pipe outside diameter
l = component length

SIMODRAIN® PE OUTLET PIECES WITH FROG FLAPS (SDR 21/17/11)

Material
PE 100

Color
Black

Type
- Machined

Notes
- Connection using double socket
- Double socket available separately; see page 22

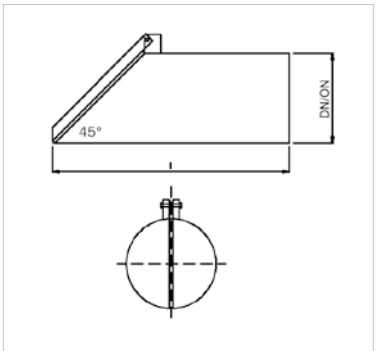



PE outlet pieces with frog flaps, SDR 21/17/11

d mm	l mm	Art.-No.
110	1,000	On request
125	1,000	On request
140	1,000	On request
160	1,000	On request
180	1,000	On request
200	1,000	On request
225	1,000	On request
250	1,000	On request
280	1,000	On request
315	1,000	On request
355	1,000	On request
400	1,000	On request
450	1,000	On request
500	1,000	On request
560	1,000	On request
630	1,000	On request

d = pipe outside diameter
l = component length

SIMODRAIN® PE BENDS, SEAMLESS OR SEGMENT-WELDED (SDR 17)

Material
PE 100

Color
Black

Type
- Seamless (r ~ 1.5 d) or segment-welded, made from SDR 17 pipes

Notes
- Without the client's approval, bends > 15° may be used only outside the inner pressure zone associated with railway traffic loads.
- Connection using double socket
- Double socket available separately; see page 22
- SDR 21 and SDR 11 on request

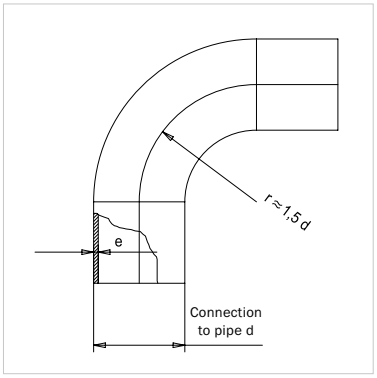



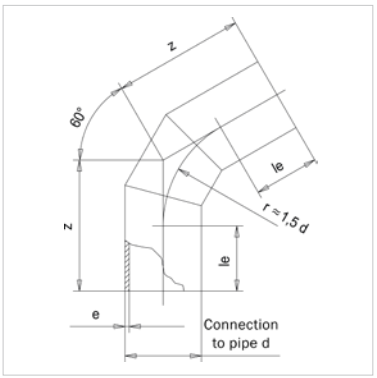



PE 100 Bends 11° to 90°, SDR 17, seamless or segment-welded

d mm	e mm	di mm
110	6.6	96.8
125	7.4	110.2
140	8.3	123.4
160	9.5	141.0
180	10.7	158.6
200	11.9	176.2
225	13.4	198.2
250	14.8	220.4
280	16.6	246.8
315	18.7	277.6
355	21.1	312.8
400	23.7	352.6
450	26.7	396.6
500	29.7	440.6
560	33.2	493.6
630	37.4	555.2

d = pipe outside diameter
e = pipe wall thickness
di = pipe inside diameter

SIMODRAIN® PE BRANCHES 45° (SDR 17)

Material
PE 100

Color
Black

Type
- Segment-welded from pipes

Notes
- 60° branches available on request
- Without the client's consent, branches may only be used outside the inner pressure zone of railway traffic loads
- Connection using double socket
- Double socket available separately; see page 22
- SDR 21 and SDR 11 on request

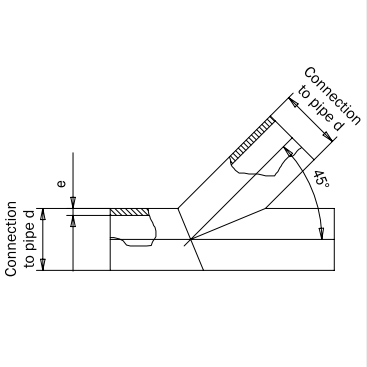



PE branches 45° (SDR 17)

d mm	e mm	di mm	Art.-No.
110	6.6	96.8	auf Anfrage
125	7.4	110.2	013700530
140	8.3	123.4	013700533
160	9.5	141.0	013700536
180	10.7	158.6	013700539
200	11.9	176.2	013700542
225	13.4	198.2	013700545
250	14.8	220.4	013700548
280	16.6	246.8	013700551
315	18.7	277.6	013700554
355	21.1	312.8	013700557
400	23.7	352.6	013700560
450	26.7	396.6	013700563
500	29.7	440.6	013700566
560	33.2	493.6	013700569
630	37.4	555.2	013700572

d = pipe outside diameter
e = pipe wall thickness
di = pipe inside diameter

SERVICES

As a customer, you always take center stage: from project development and raw materials purchasing to production and on-site planning, we are business partners you can rely on. Take advantage of the expertise we have acquired over many years.



SIMONA ACCESSORIES

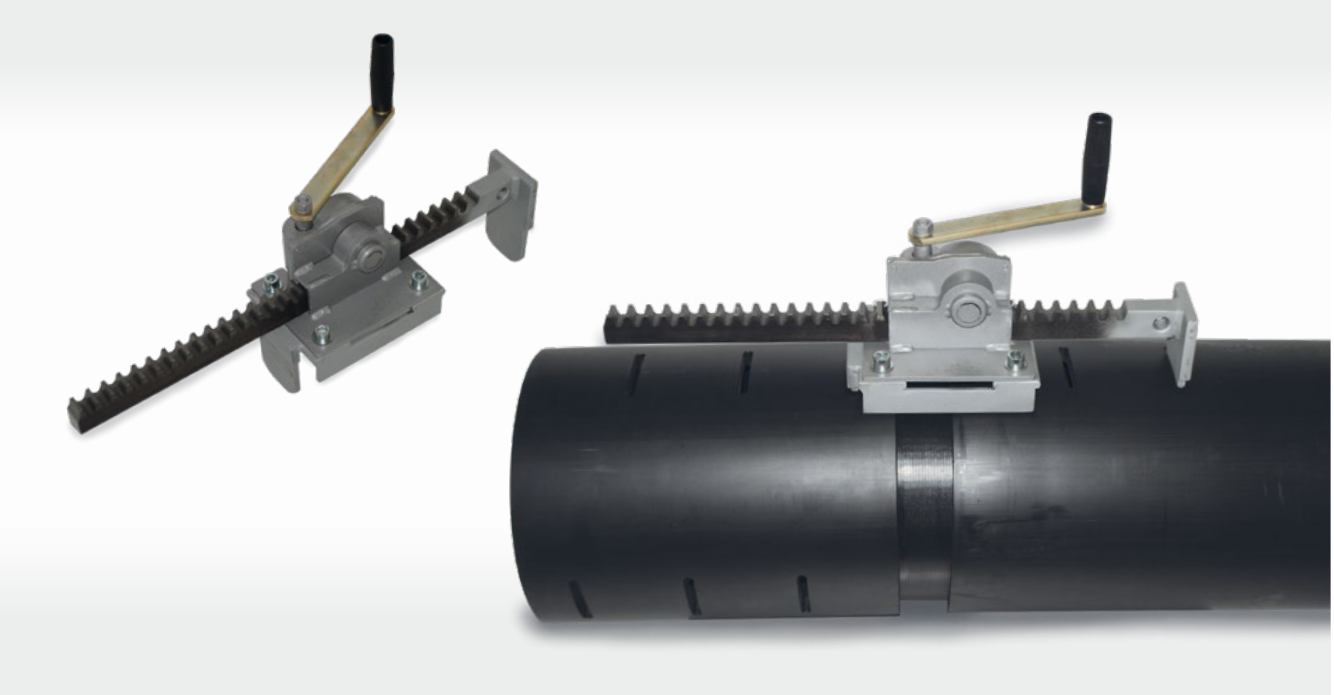

Manual insertion tool for slotted SIMODRAIN® pipes

For assembly on the construction site SIMONA offers a manual insertion tool for rent or purchase. The laying aid specially developed for installation on site greatly simplifies the task of joining the slotted SIMODRAIN® pipes.

Naturally, our members of staff will be only too pleased to offer their advice, enabling you to benefit from their experience and the necessary technical expertise.

simodrain@simona-group.com

ADVICE AND INFORMATION



Advisory service

Our customers benefit from our customized solutions, all of which are designed to help them operate successfully within their specific markets. SIMONA has many years of experience in the machining of sheets, pipes, and fittings. You can always rely on our extensive know-how and our high level of technical expertise. Our staff at the Technical Service Center will be only too pleased to advise you:

pipingsystems@simona-group.com

SIMONA Academy

At our Technology Center and at our training facilities in Kirn you have an opportunity to attend various product training sessions, learn new processing techniques, and train under supervision. On request, we will also be pleased to hold training sessions at your premises. Contact us at:

Phone +49 (0) 67 52 14-251
mail@simona.academy



Information service

You can obtain further information in the form of catalogs, brochures, case studies, project reports, DVDs, technical data sheets, and product samples. Contact our Marketing Department at:

Phone +49 (0) 67 52 14-383
marketing@simona-group.com

Delivery service

We stock our standard products in warehouses and distribution centers worldwide. Thus, we can respond quickly and flexibly to your needs. For further information about dimensions and availability, please contact our Sales Department:

simodrain@simona-group.com

QUESTIONNAIRE ON THE STRUCTURAL SIZING OF PIPES

Download at: www.simona.de/fb-rohr
Return to: simodrain@simona-group.com

SIMONA AG
Business Line Infrastructure
Teichweg 16
55606 Kirn

Email
simodrain@simona-group.com

Your details

Construction project

Company

Contact person

Street address

Postal code/city

Telephone number

Email

Pipe

☐ MP Multi-purpose pipe, 1/3 slotted DN/OD

☐ LP Partial leachate pipe, 2/3 slotted

☐ TP Full leachate pipe, slotted all round

☐ UP Multi-purpose pipe, solid wall pipe without perforation

Laying conditions

☐ Embankment conditions (trench width ≥ 4 x OD)

☐ Trench conditions

Angle of slope β

Trench width at pipe crown height b

Cover height h

Cover fill condition① please place cross on the right

Embedding condition② please place cross on the right

Groundwater

☐ None

☐ Groundwater at: _____ (mm) above the pipe invert

Live loads

Next to the shaft:
☐ LM 71 multi-track
☐ LM 71 single-track

On the shaft:
☐ SLW 60
☐ SLW 30
☐ Lkw 12
☐ Please specify

Soil characteristics

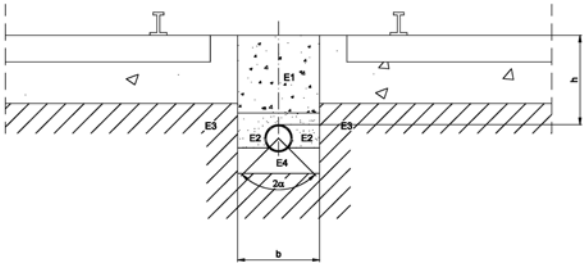

E1 _____ D_{Pr} _____

E2 _____ D_{Pr} _____

E3 _____ D_{Pr} _____

E4 _____ D_{Pr} _____

G1: non-cohesive soils (GE, GW, GI, SE, SW, SI)
G2: slightly cohesive soils (GU, GT, SU, ST)
G3: cohesive mixed soils, silt (GU*, GT*, SU*, ST*, UL, UM)
G4: cohesive soils (TL, TM, TA, OU, OT, OH, OK, UA)

Place, date

Project Manager

Signature

①

☐ **A1:** Trench fill compacted against the natural soil in layers (without proof of degree of compaction); also applies to horizontal sheeting (lagging)

☐ **A2:** Vertical sheeting for the trench with trench piling that is only removed after filling. Bracing boards or devices that are removed step by step as the trench is filled. Uncompacted trench fill. Washing in of fill (only suitable for soils in group G1).

☐ **A3:** Vertical sheeting for the trench with sheet pile walls, light sheet pile walls, planking, bracing boards or devices that are only removed after filling.

☐ **A4:** Trench fill compacted against the natural soil in layers with proof of degree of compaction; also applies to horizontal sheeting (lagging). The A4 cover fill condition does not apply to soils in group G4.

②

☐ **B1**: B1: Embedding compacted against the natural soil in layers or in the embankment fill in layers (without proof of degree of compaction); also applies to horizontal sheeting (lagging)

☐ **B2**: Vertical sheeting within the pipe zone with trench piling that extends to the floor of the trench and is only removed after filling and compaction. Shoring panels or equipment may be used provided adequate soil compaction is ensured after the shoring is withdrawn.

☐ **B3**: Vertical sheeting within the pipe zone with sheet pile walls or light sheet pile walls and compaction against the sheeting, which extends below the floor of the trench. Vertical sheeting with planking, bracing boards or devices that are only removed from the pipe zone after filling and compaction; it cannot be included in any reliable computational model.

☐ **B4**: Embedding compacted against the natural soil in layers or in the embankment fill in layers, with proof of the degree of compaction. The B4 embedding condition does not apply to soils in group G4.

QUESTIONNAIRE ON THE STRUCTURAL SIZING OF SHAFTS

Download at: www.simona.de/fb-schacht
Return to: simodrain@simona-group.com

SIMONA AG
Business Line Infrastructure
Teichweg 16
55606 Kirn

Email
simodrain@simona-group.com

Your details

Construction project

Company

Contact person

Street address

Postal code/city

Telephone number

Email

Dimensions

Outside diameter

Height of shaft jacket

Diameter of the shaft pi

Placement depth

Lateral distance of the shaft from the track

Accessible shaft ☐ yes ☐ no

Shaft cover
☐ Class A 15 ☐ Class D 400
☐ Class B 125 ☐ Class E 600
☐ Class C 250 ☐ Class F 900

Groundwater

☐ None

☐ Groundwater at: _____ (mm) above the shaft bottom

Live loads

Next to the shaft:
☐ LM 71 multi-track
☐ LM 71 single-track

On the shaft:
☐ SLW 60
☐ SLW 30
☐ Lkw 12
☐ No live load
☐ Man load
☐ Please specify

Soil characteristics

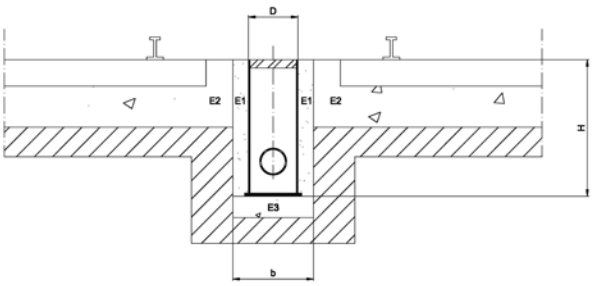

Next to the shaft E1 _____ D_{Pr} _____

In situ soil E2 _____ D_{Pr} _____

Under the shaft E3 _____ D_{Pr} _____

G1: non-cohesive soils (GE, GW, GI, SE, SW, SI)
G2: slightly cohesive soils (GU, GT, SU, ST)
G3: cohesive mixed soils, silt (GU*, GT*, SU*, ST*, UL, UM)
G4: cohesive soils (TL, TM, TA, OU, OT, OH, OK, UA)

Other information

Place, date

Project Manager

Signature

QUESTIONNAIRE ON THE SHAFT CONFIGURATION OF SAND TRAP SHAFTS

Download at: www.simona.de/fb-schacht
Return to: simodrain@simona-group.com

SIMONA AG
Business Line Infrastructure
Teichweg 16
55606 Kirn

Email
simodrain@simona-group.com

Your details

Construction project

Shaft no.

Company

Contact person

Telephone number

Email

Shaft diameter

DN d (mm)

Floor plate

Thickness _____ (in mm)

☐ For concrete foundation
☐ Sand-gravel supporting fill
☐ Inside the pressure zone of railway traffic loads
☐ Outer pressure zone, outside the pressure zone

SIMODRAIN® Sandfangschacht

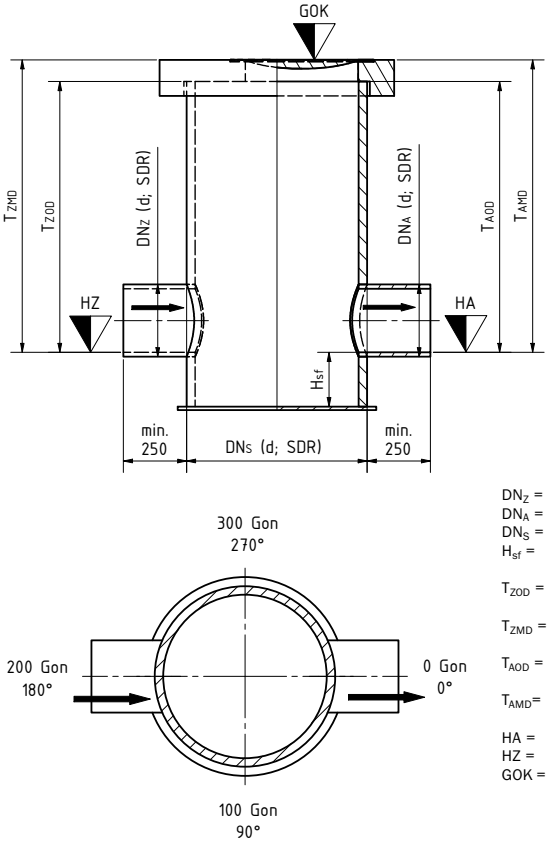

DN_Z = DN/OD inlet
DN_A = DN/OD outlet
DN_S = DN/OD shaft
H_{sf} = Sand trap height Standard 300mm
T_{ZOD} = Inlet depth excluding shaft cover
T_{ZMD} = Depth from ground level to in let invert
T_{AOD} = Outlet depth ex-cluding shaft cover
T_{AMD}= Depth from ground level to outlet invert
HA = Outlet invert
HZ = Inlet invert
GOK = Ground level

Inlets

	Inlet 1	Inlet 2	Inlet 3	Inlet 4
DN				
d (mm)				
SDR class				
Inlet depth TZMD (mm)				
Inlet depth TZOD (mm)				
Position (Degrees)				
Position (Gon)				

Sand trap shaft outlet (standard height: 300 mm)

	Outlet 1
DN	
d (mm)	
SDR class	
TAMD (mm)	
TAOD (mm)	
Gon	

Shaft ladder

☐ Stainless steel ☐ Plastic
☐ Following position Gon Degrees
☐ no ladder

Place, date

Signature

QUESTIONNAIRE ON THE SHAFT CONFIGURATION OF CHANNEL SHAFTS

Download at: www.simona.de/fb-schacht
Return to: simodrain@simona-group.com

SIMONA AG
Business Line Infrastructure
Teichweg 16
55606 Kirn

Email
simodrain@simona-group.com

Your details

Construction project

Shaft no.

Company

Contact person

Telephone number

Email

Shaft diameter

DN d (mm)

Floor plate

Thickness _____ (in mm)

☐ For concrete foundation
☐ Sand-gravel supporting fill
☐ Inside the pressure zone of railway traffic loads
☐ Outer pressure zone, outside the pressure zone

SIMODRAIN® Channel Shaft

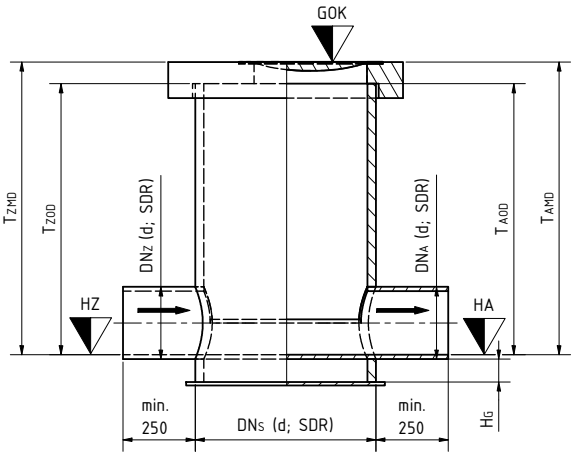

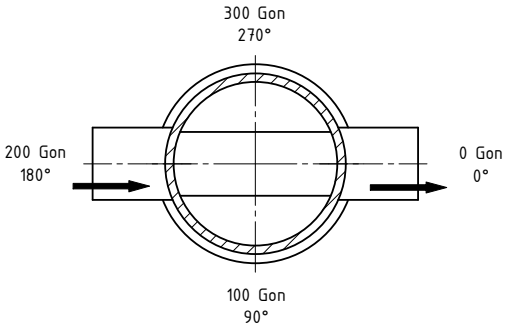

DN_Z = DN/OD inlet
DN_A = DN/OD outlet
DN_S = DN/OD shaft
H_G = Channel height Standard 100mm
T_{ZOD} = Inlet depth excluding shaft cover
T_{ZMD} = Depth from ground level to in let invert
T_{AOD} = Outlet depth excluding shaft cover
T_{AMD} = Depth from ground level to outlet invert
HA = Outlet invert
HZ = Inlet invert
GOK = Ground level

Inlets

	Inlet 1	Inlet 2	Inlet 3	Inlet 4
DN				
d (mm)				
SDR class				
Inlet depth TZMD (mm)				
Inlet depth TZOD (mm)				
Position (Degrees)				
Position (Gon)				

Channel shaft outlet (standard height: 100 mm)

	Outlet 1
DN	
d (mm)	
SDR class	
TAMD (mm)	
TAOD (mm)	
Gon	

Channel height

Channel height h_g mm (standard height 100 mm)

Shaft ladder

☐ Stainless steel ☐ Plastic
☐ Following position Gon Degrees
☐ no ladder

Place, date

Signature

GLOBAL THERMOPLASTIC SOLUTIONS



Contact and more:

simona.de/worldwide

SIMONA AG
Teichweg 16
55606 Kirn
Germany
Phone +49 (0) 67 52 14-0
mail@simona-group.com
www.simona.de

10/2026